DRESS

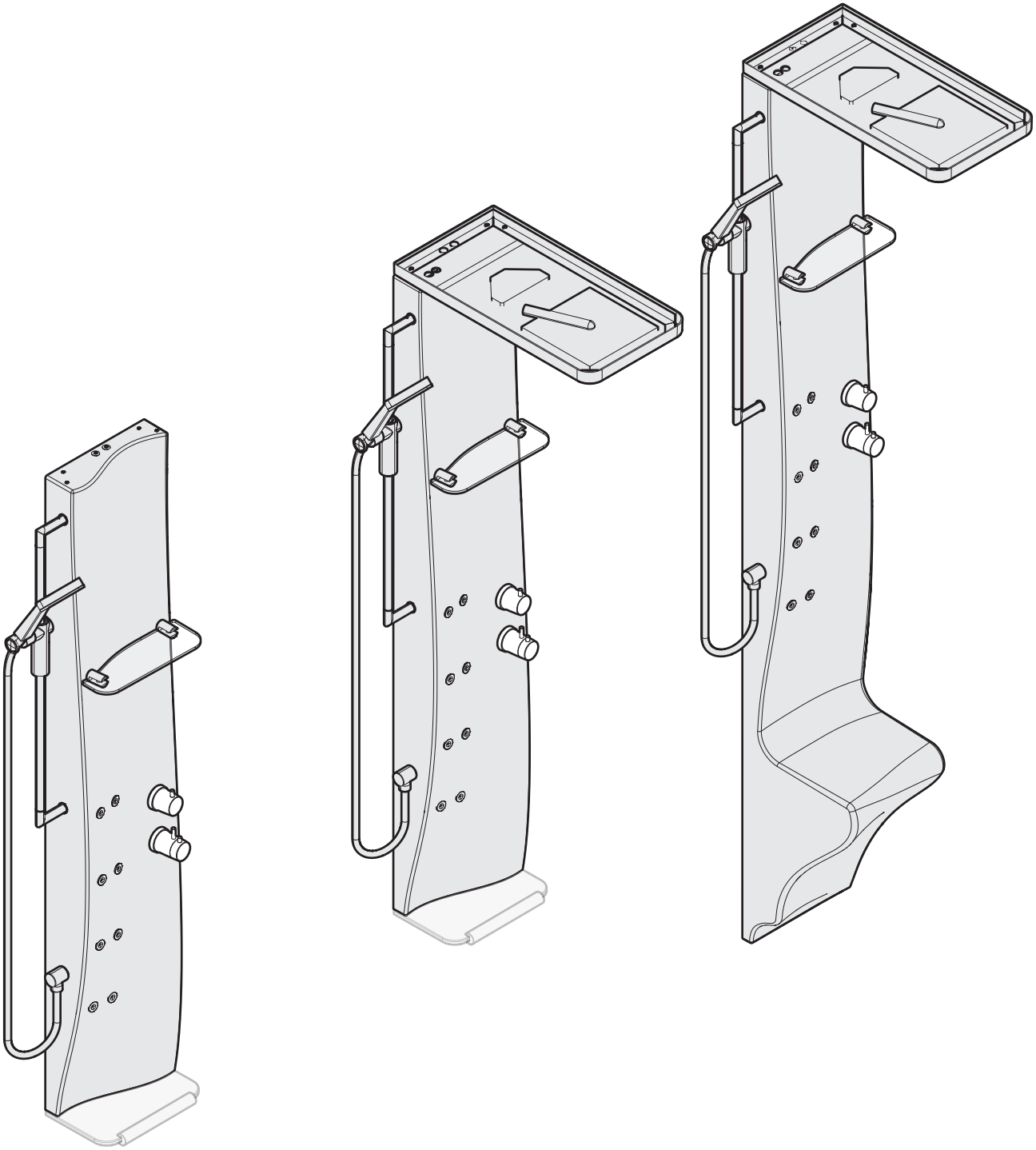

2 5 9

DRESS

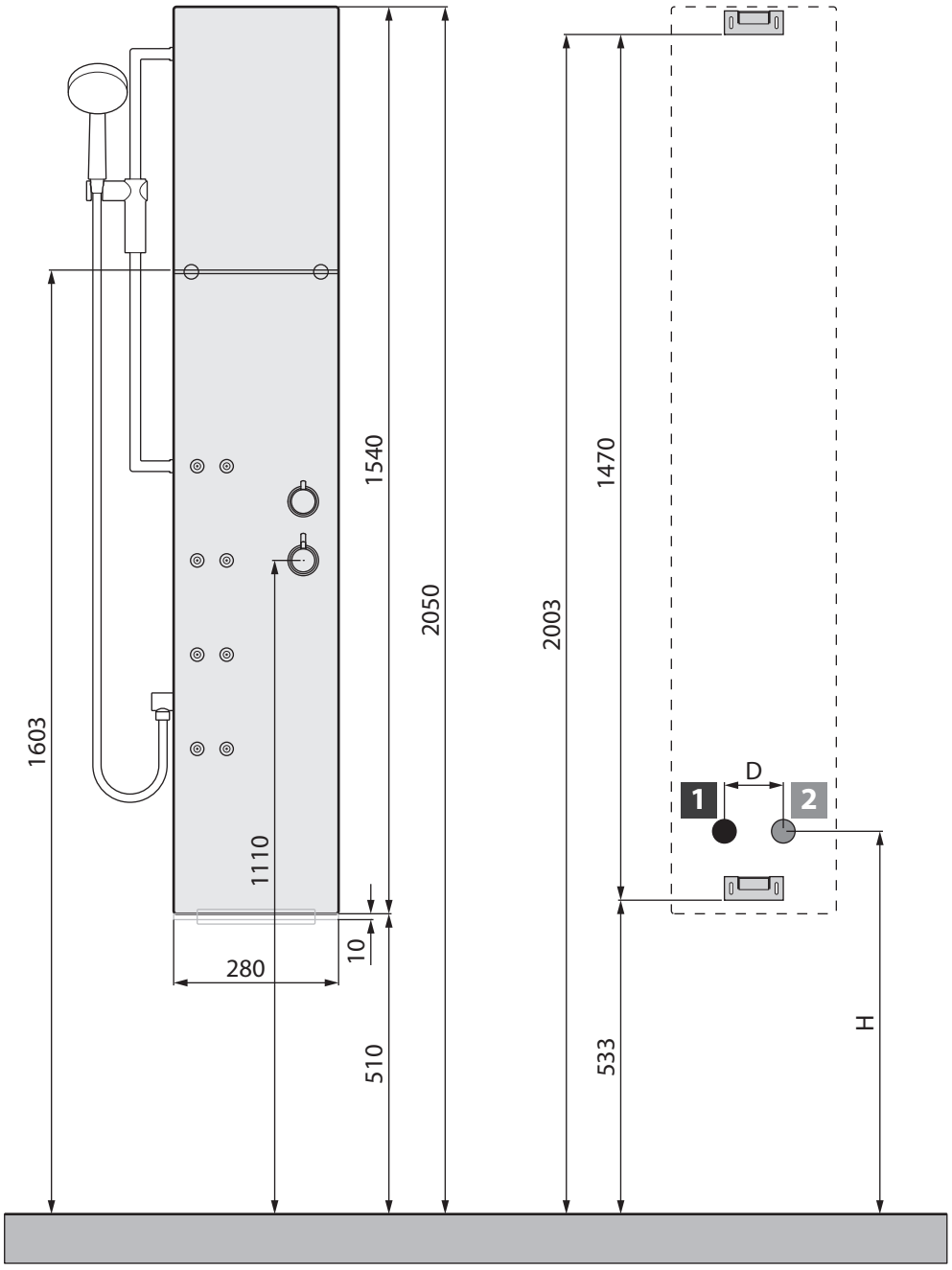

650 ≤ H ≤ 1200
60 ≤ D ≤ 200

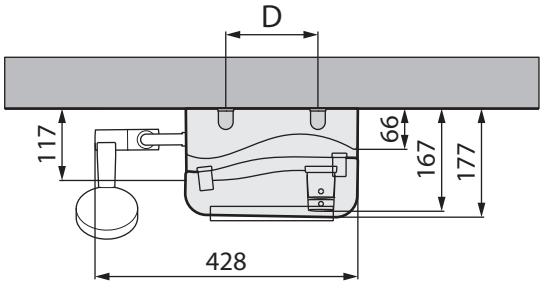

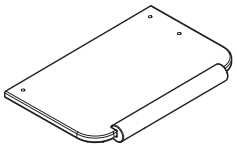

OPTIONAL
اختياري

1

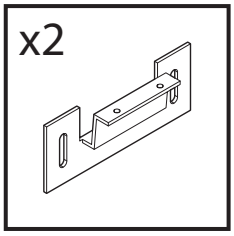
x2

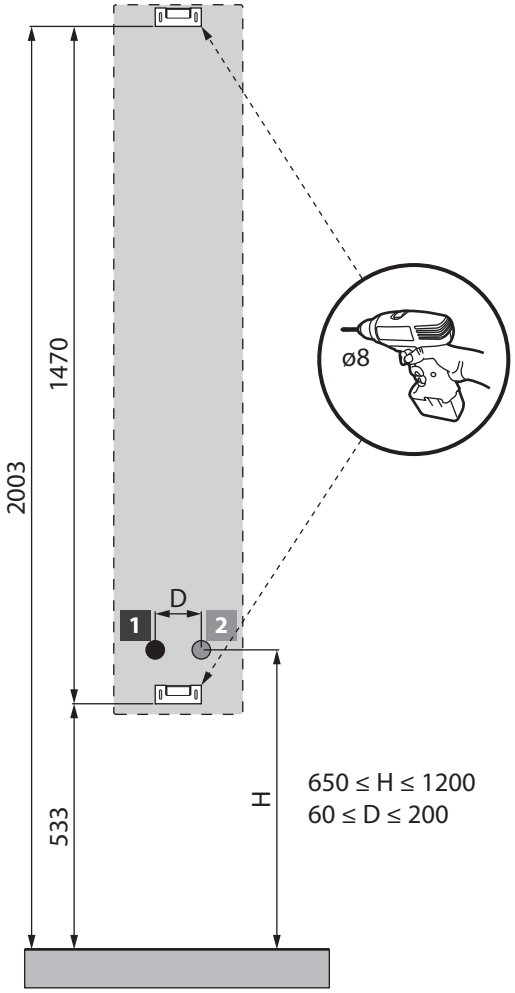
ø8
1470
2003
D
1
2
H
533
650 ≤ H ≤ 1200
60 ≤ D ≤ 200

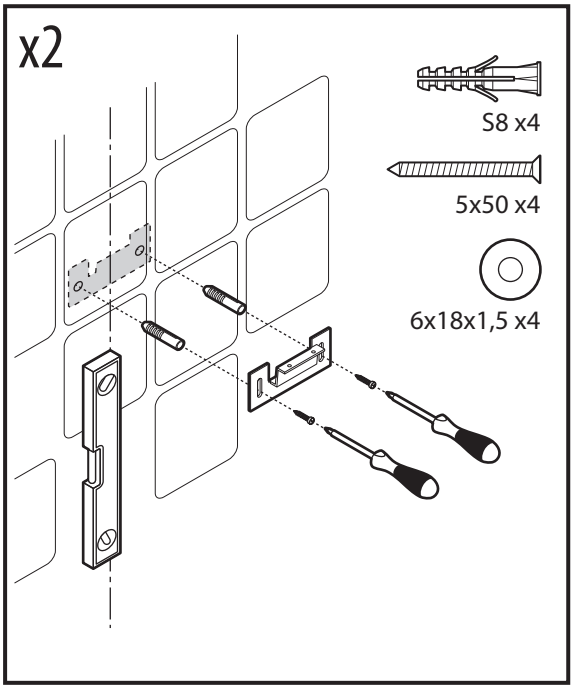
x2
S8 x4
5x50 x4
6x18x1,5 x4

1
2

2

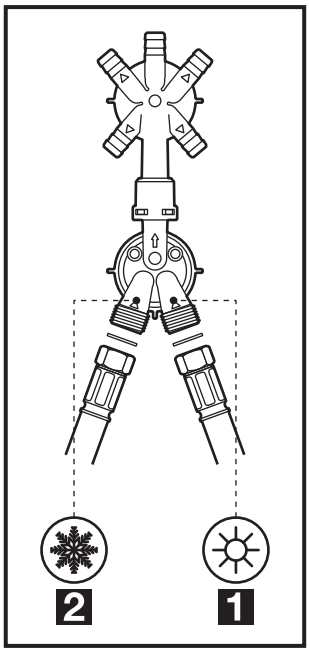
2
1

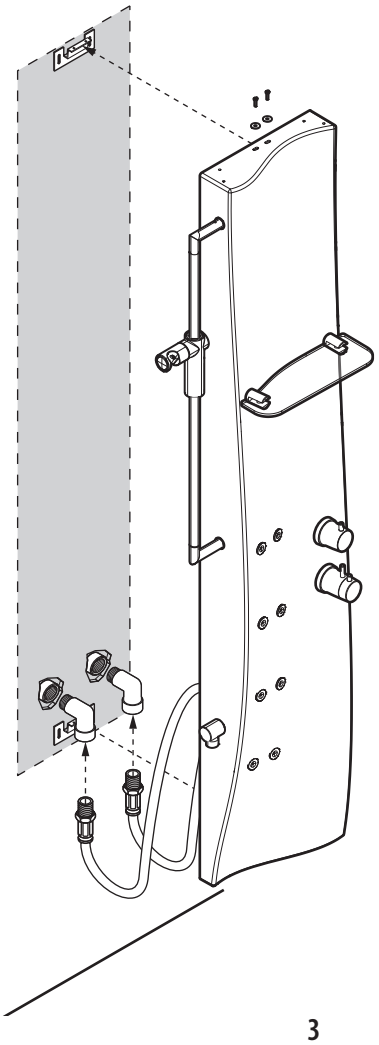

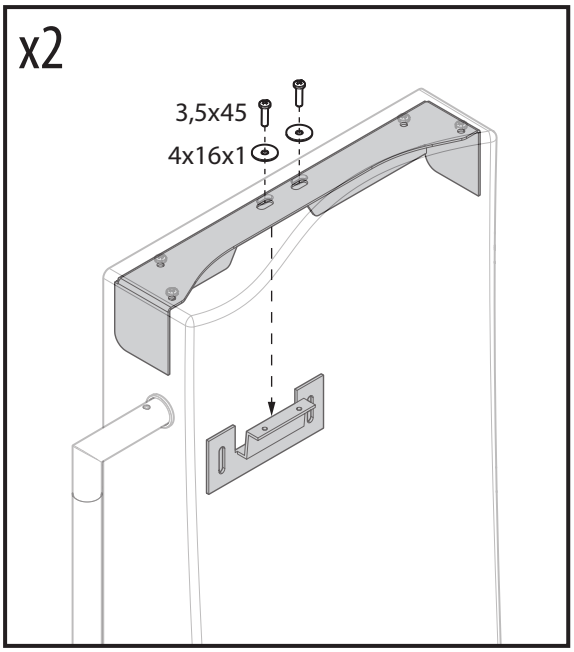
x2
3,5x45
4x16x1

3

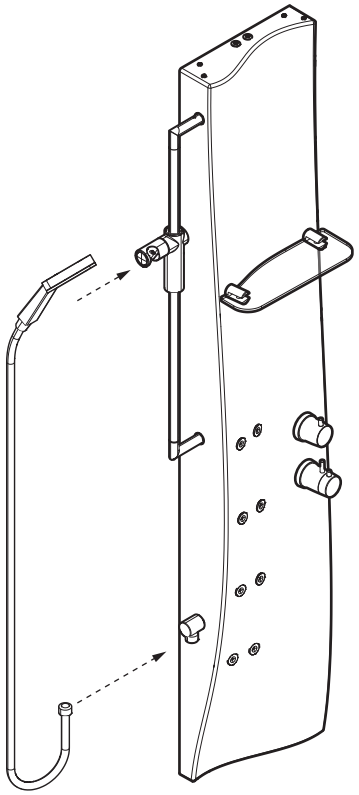

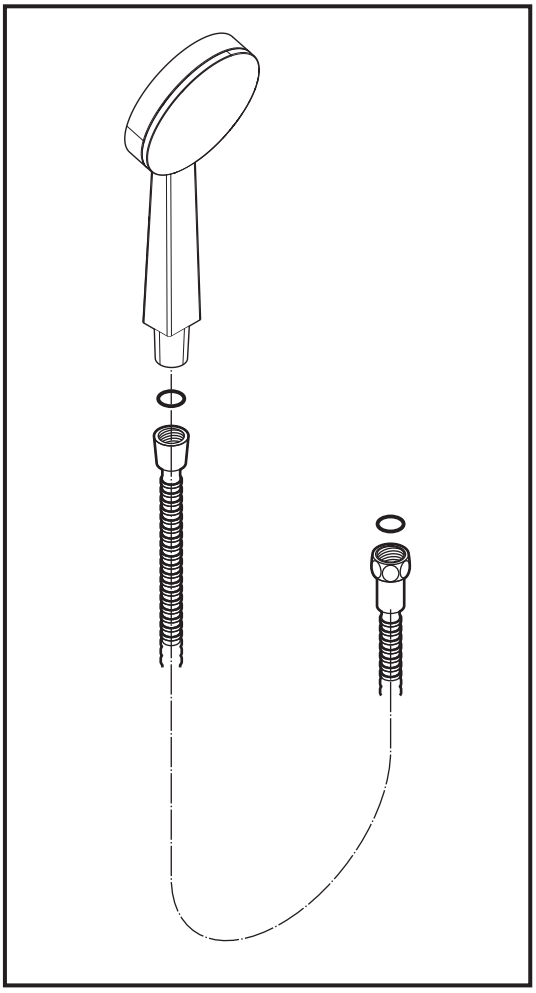

4

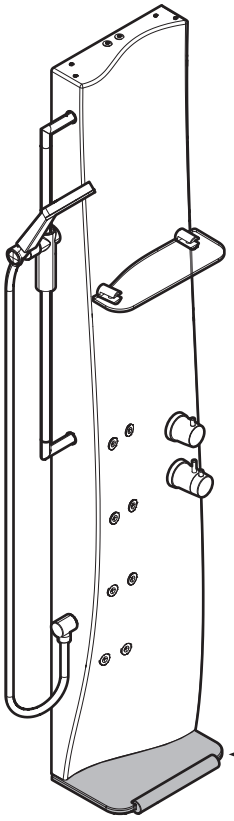

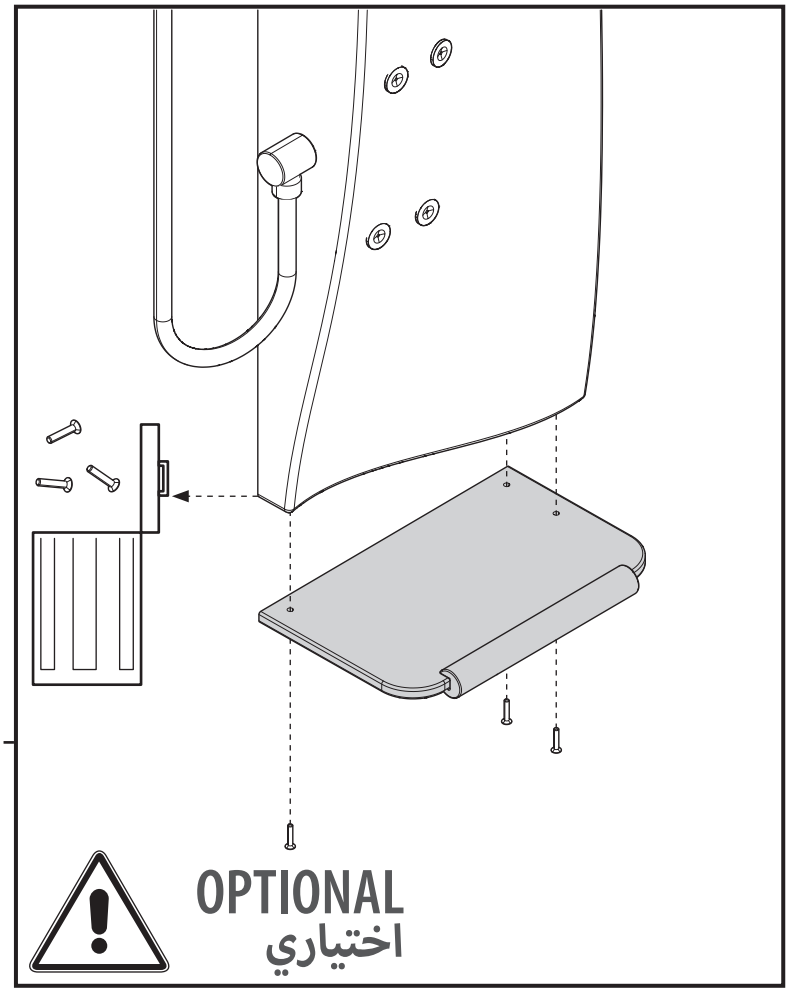

OPTIONAL
اختياري

DRESS S

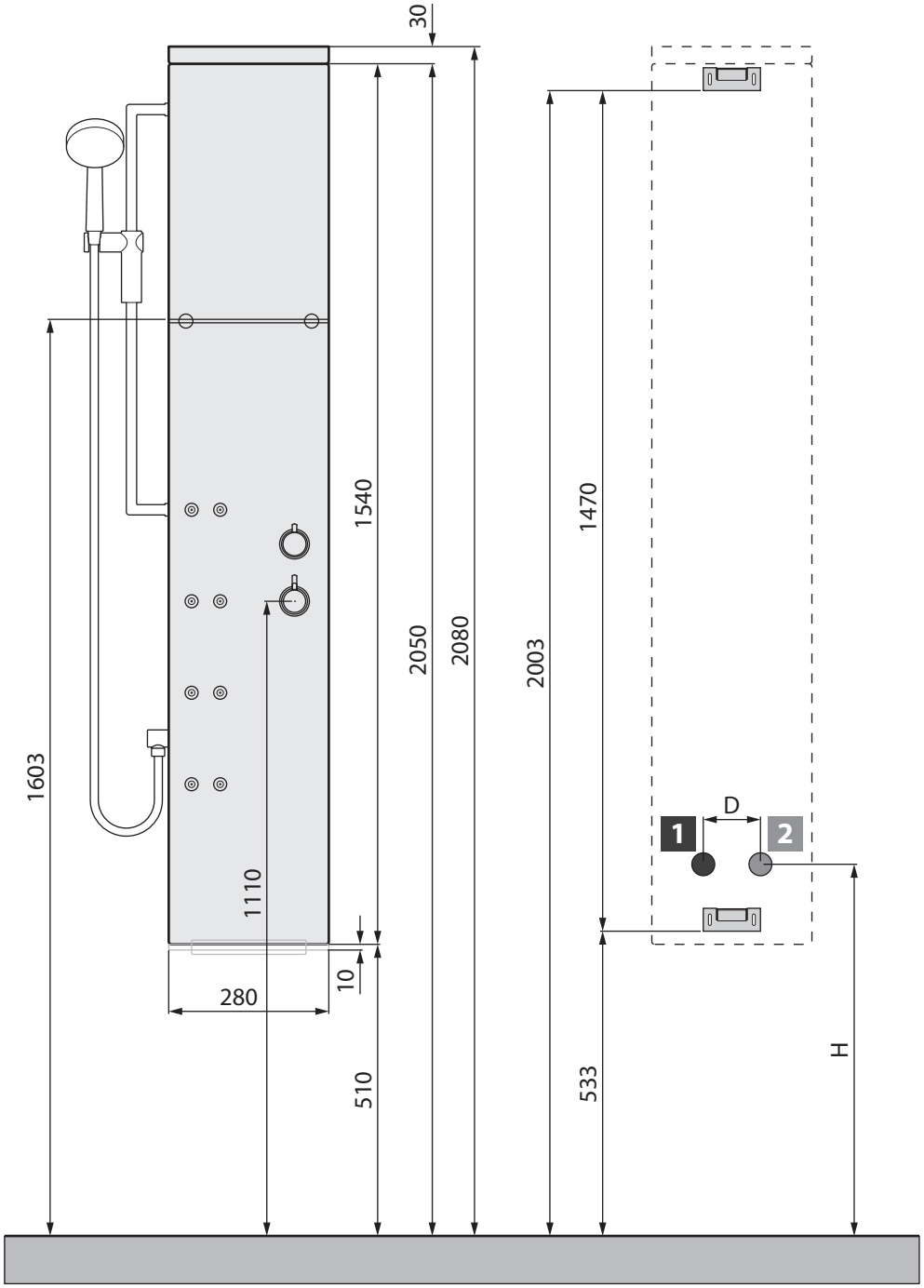

650 ≤ H ≤ 1200
60 ≤ D ≤ 200

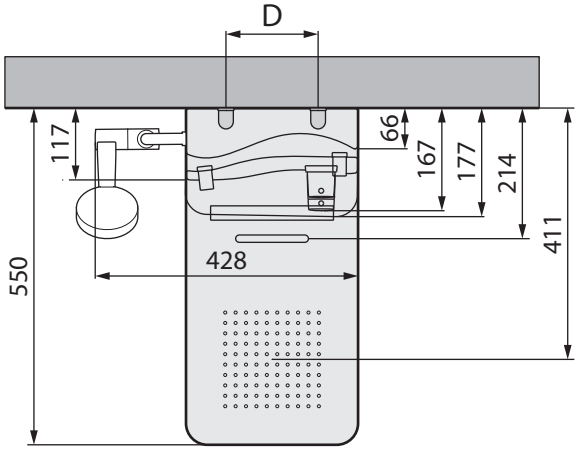

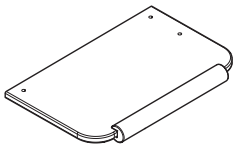

OPTIONAL
اختياري

1

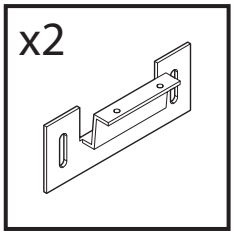
x2

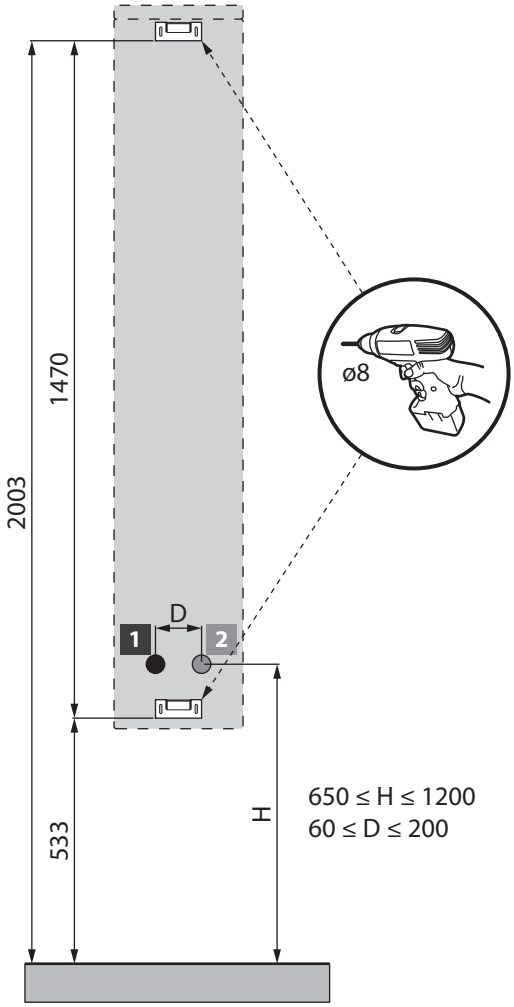
2003
1470
533
H
D
1
2
ø8
650 ≤ H ≤ 1200
60 ≤ D ≤ 200

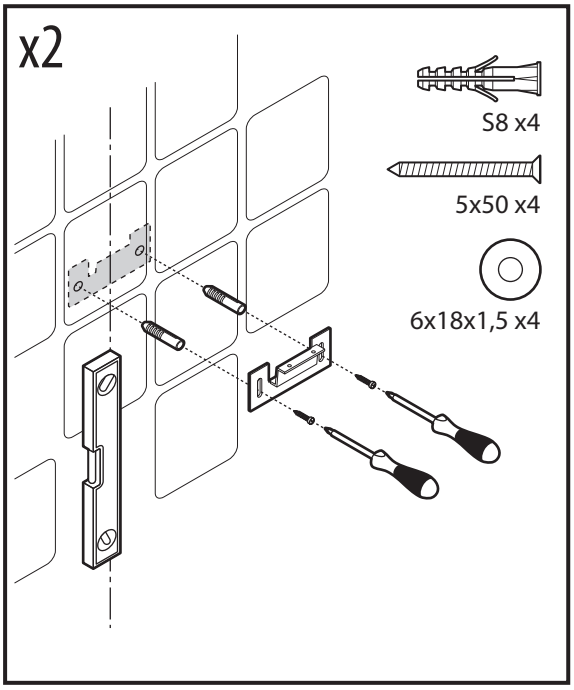
x2
S8 x4
5x50 x4
6x18x1,5 x4

1
2

2

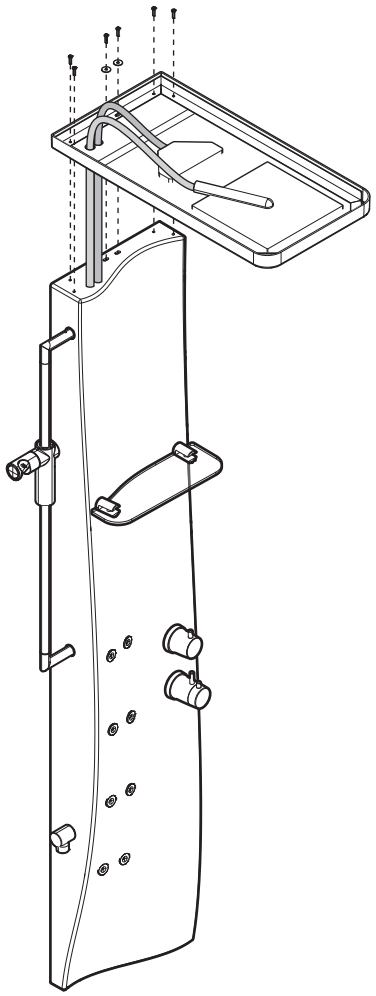

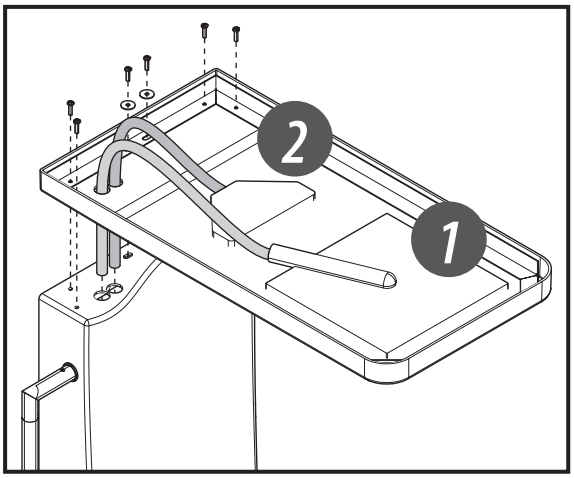
2
1

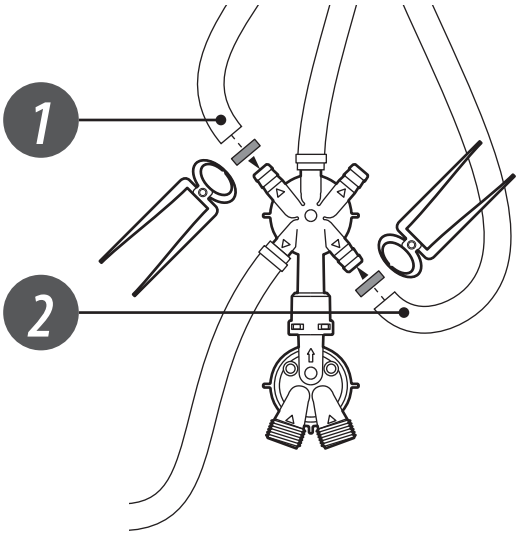
1
2

3

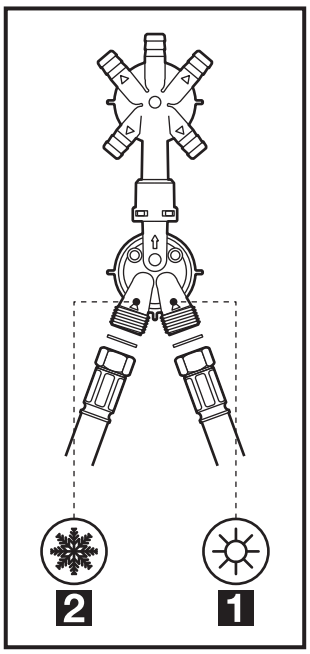

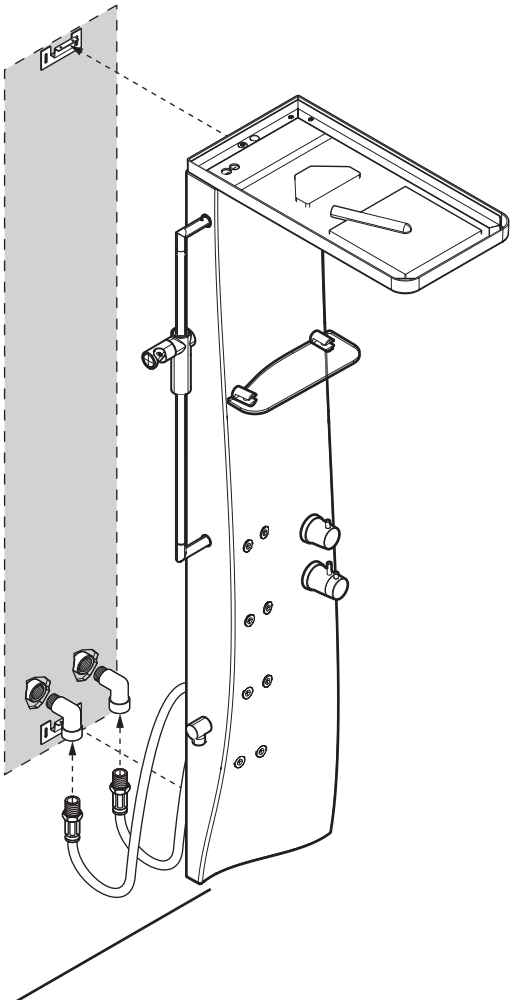

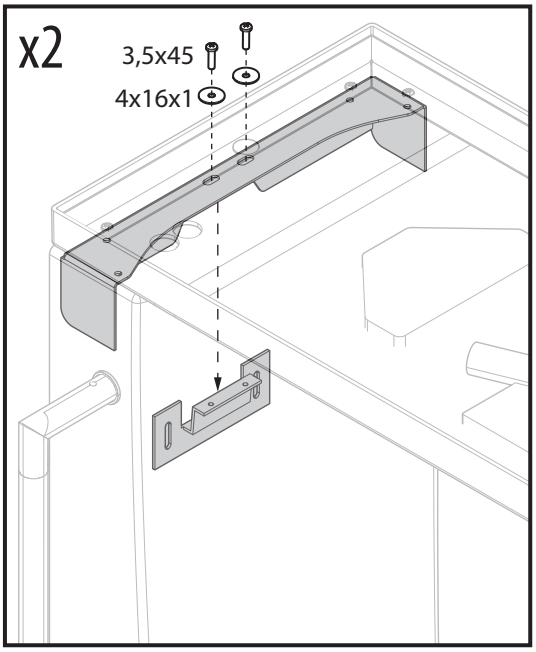

4

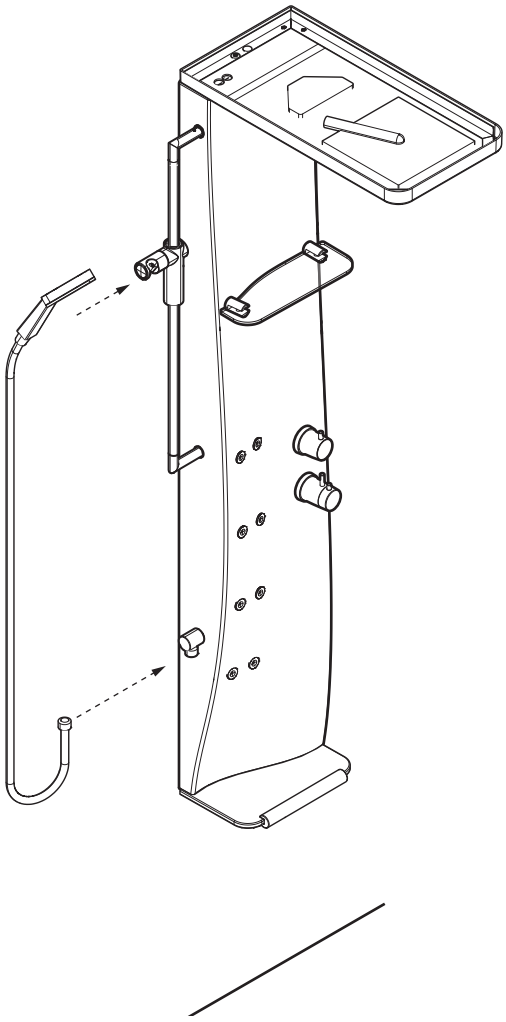

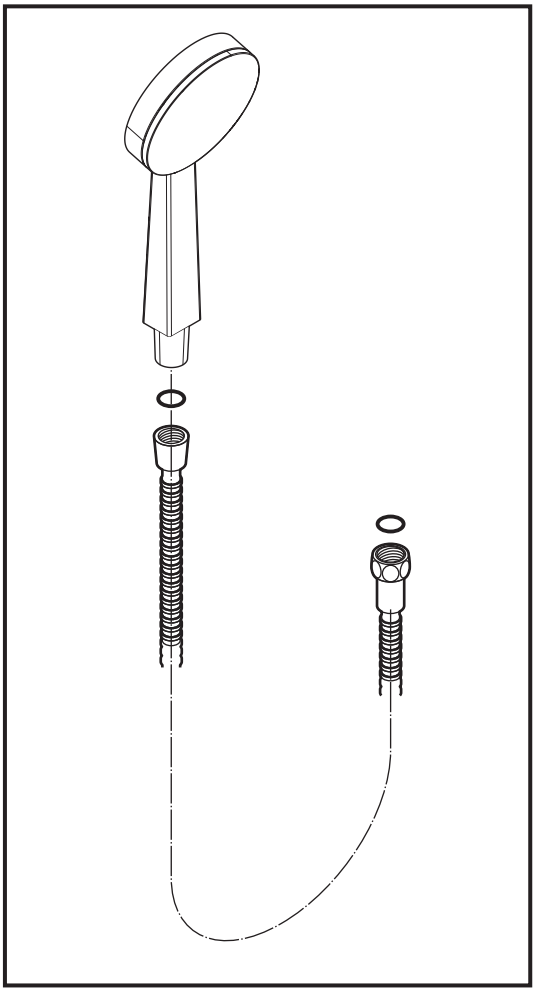

5

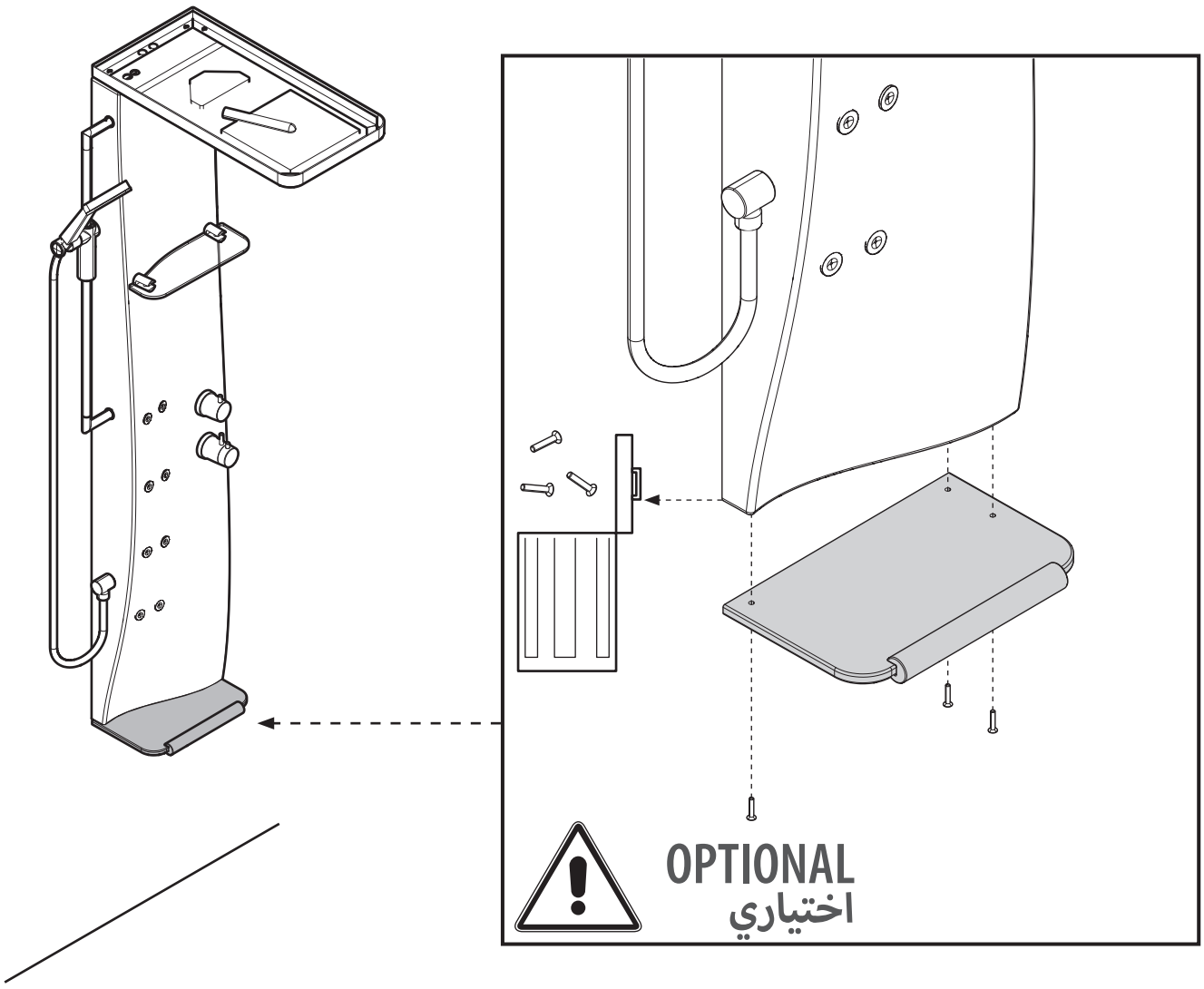

DRESS PLUS

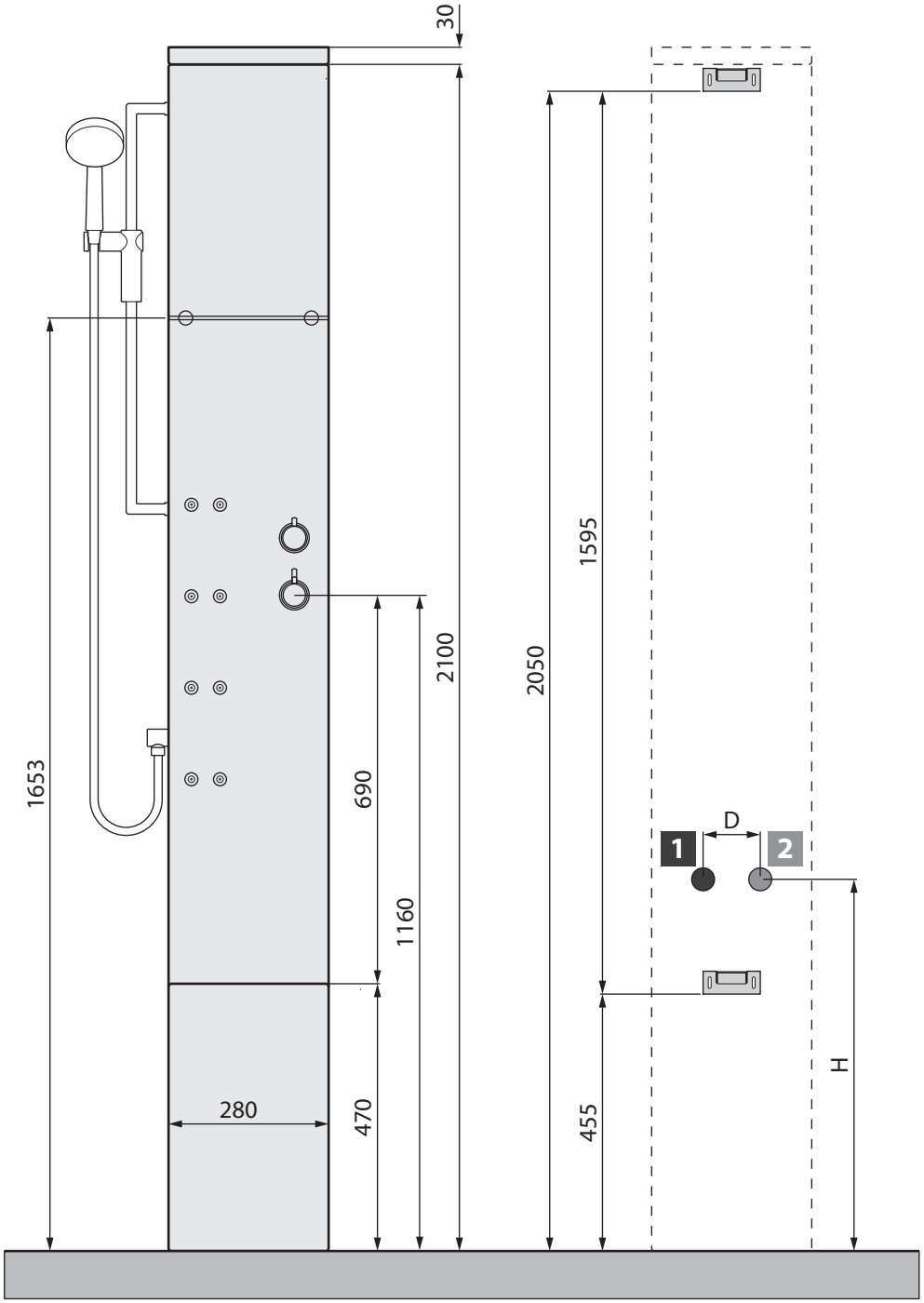

600 ≤ H ≤ 1200
60 ≤ D ≤ 200

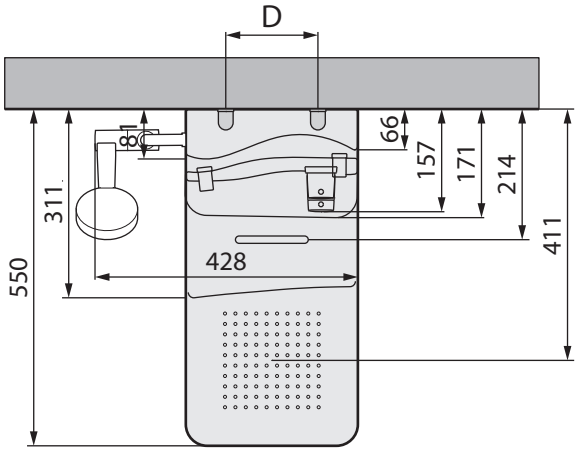

1

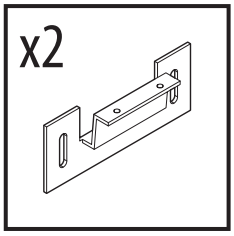
x2

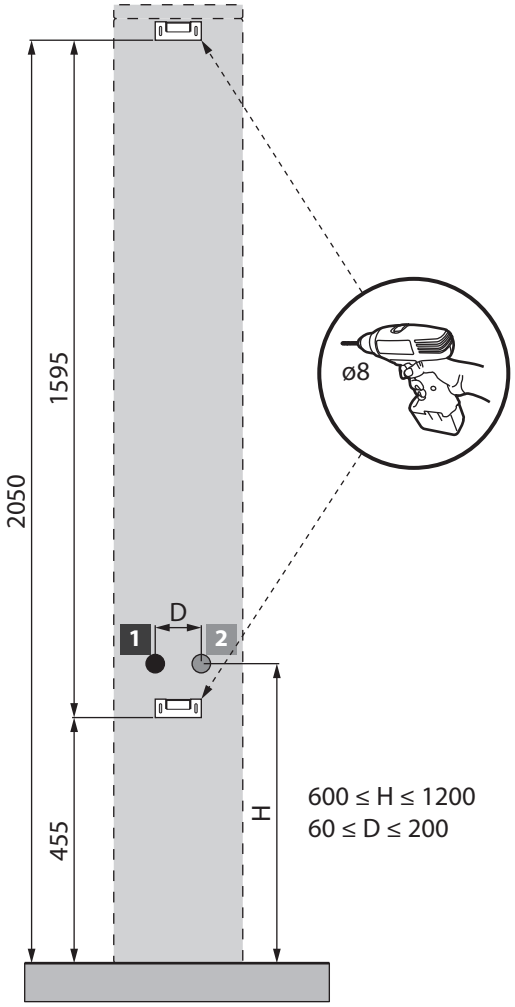
2050
1595
455
H
D
1
2
ø8
600 ≤ H ≤ 1200
60 ≤ D ≤ 200

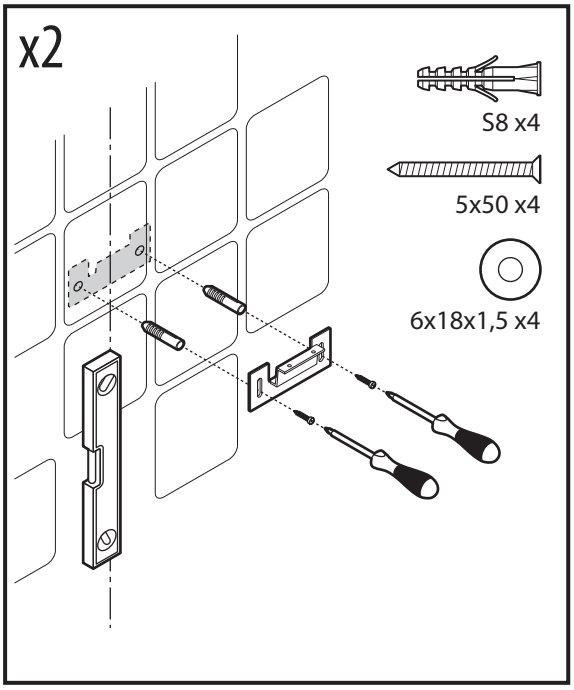
x2
S8 x4
5x50 x4
6x18x1,5 x4

1
2

2

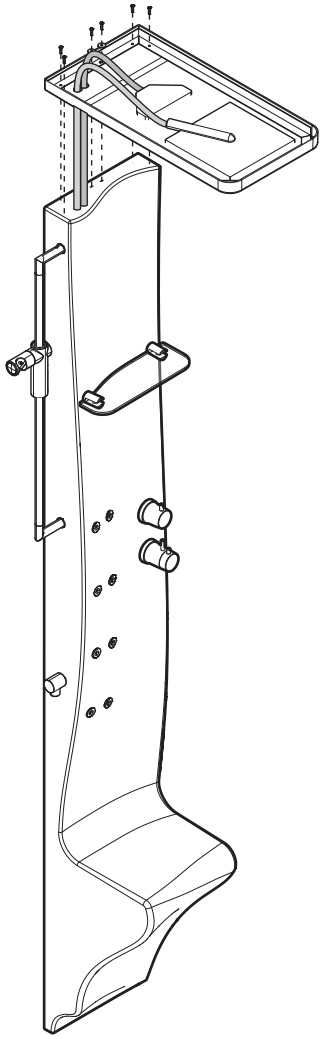

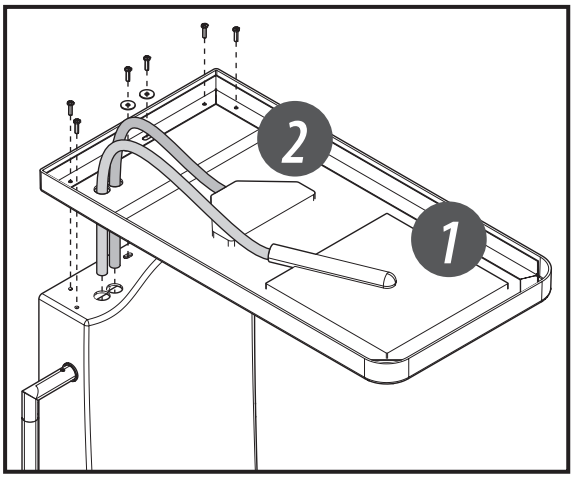
2
1

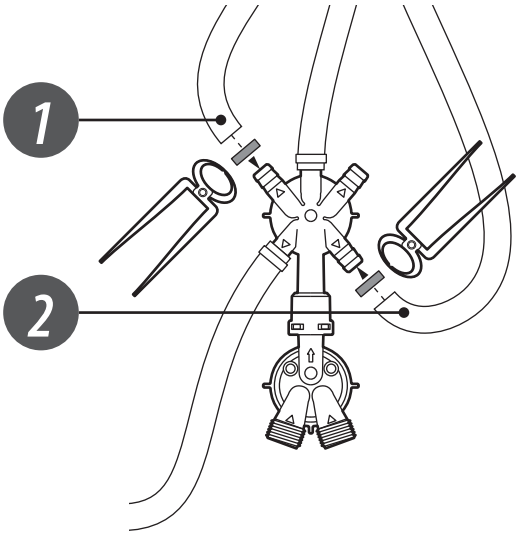
1
2

3

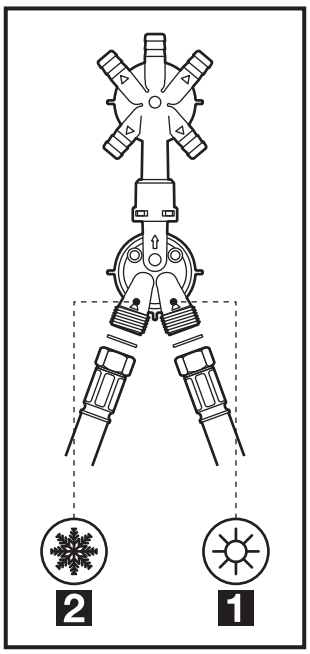

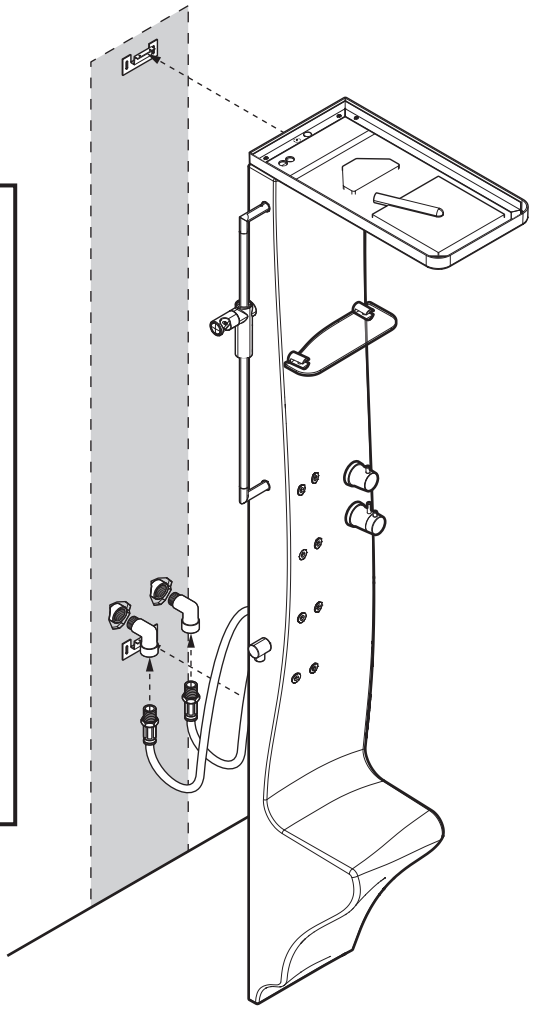

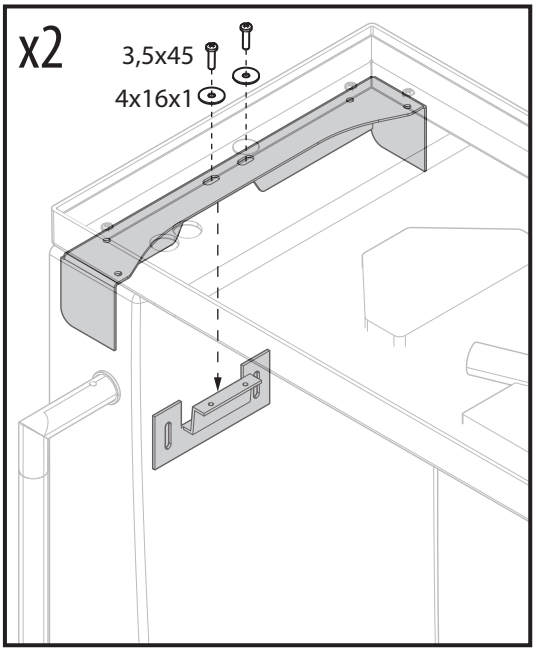

4

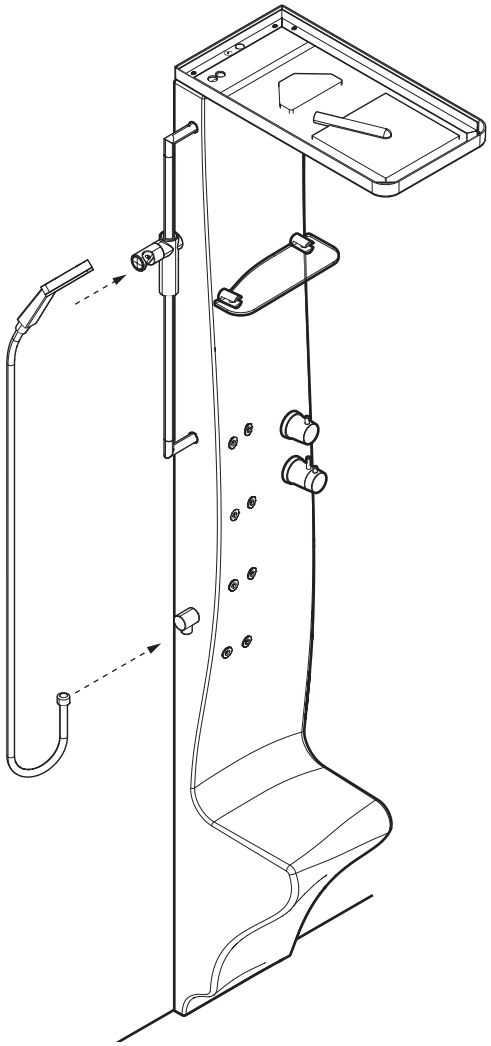

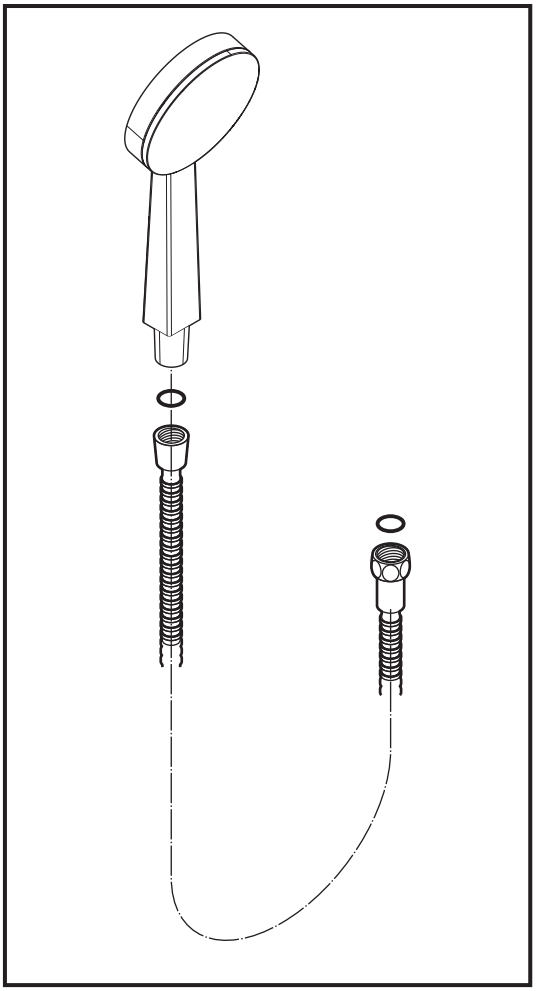

A

IT Manutenzione
FR Entretien
EN Maintenance
DE Wartung
NL Onderhoud
ES Mantenimiento
CS Údržba
SL Vzdrževanje
HU Karbantartás
PL Konserwacja
RU Обслуживание
PT Manutenção
AR الصيانة

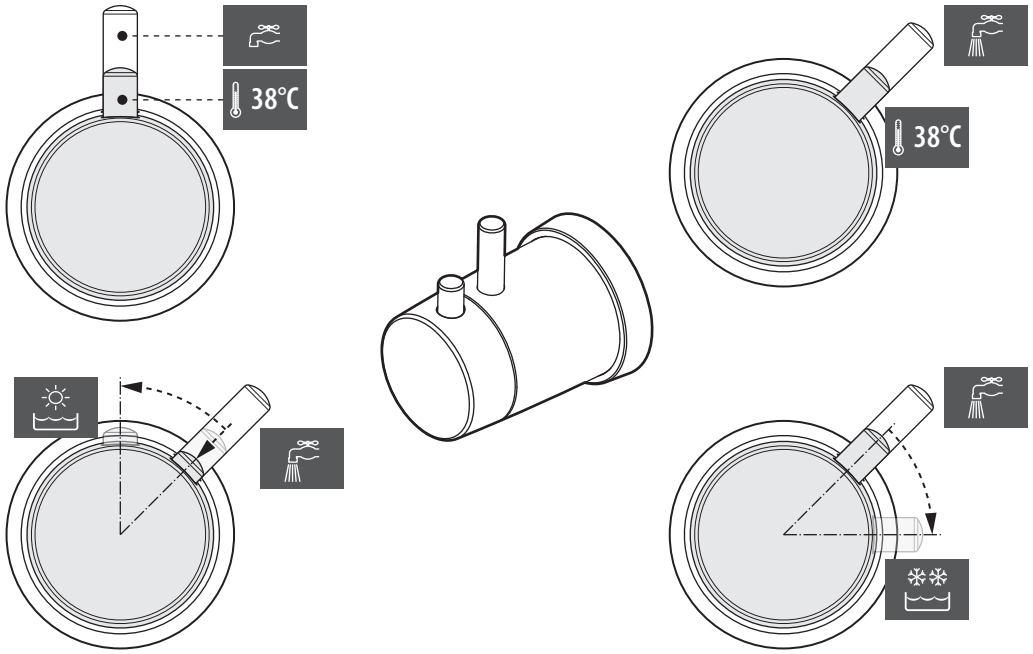

B

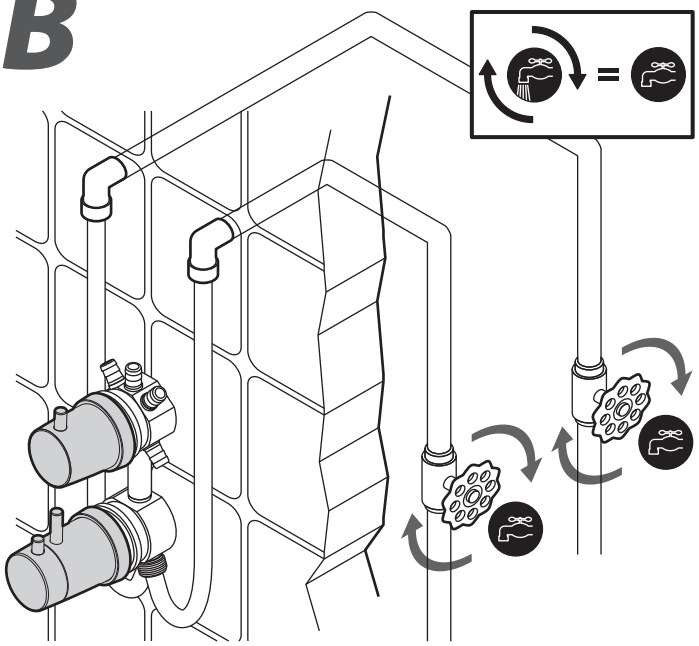

C

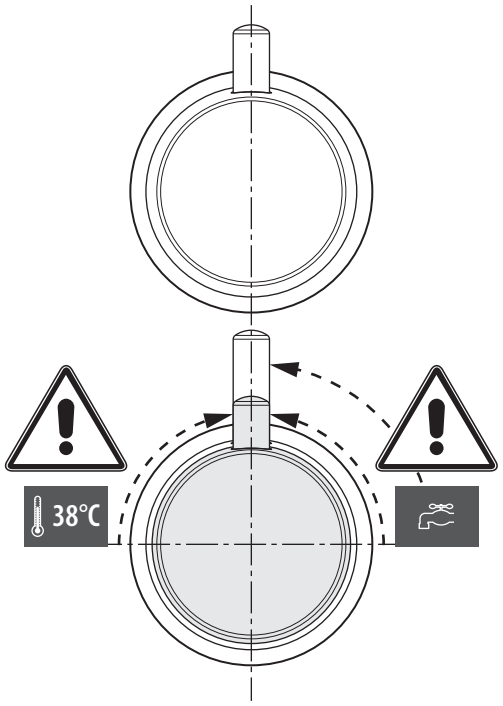

D

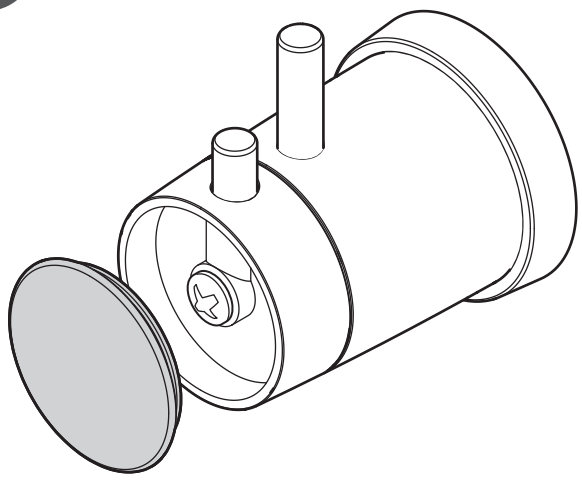

E

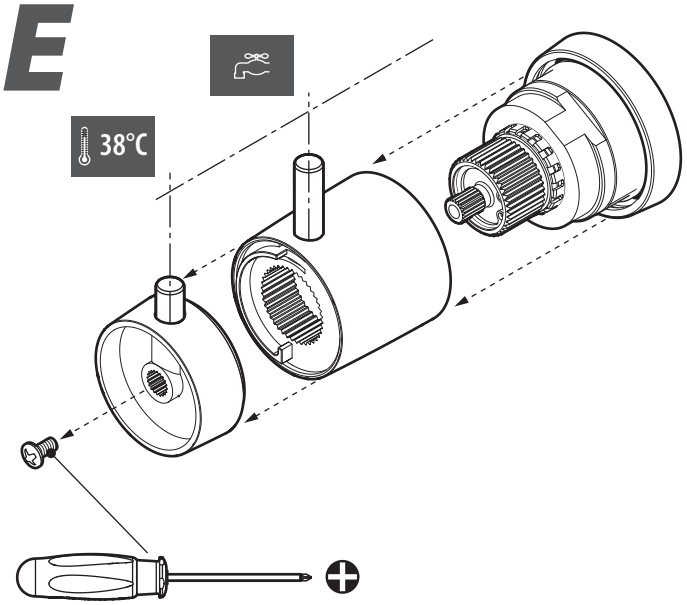

F

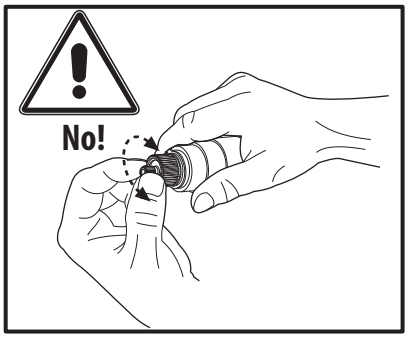

G

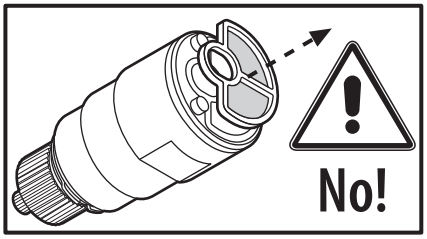

H

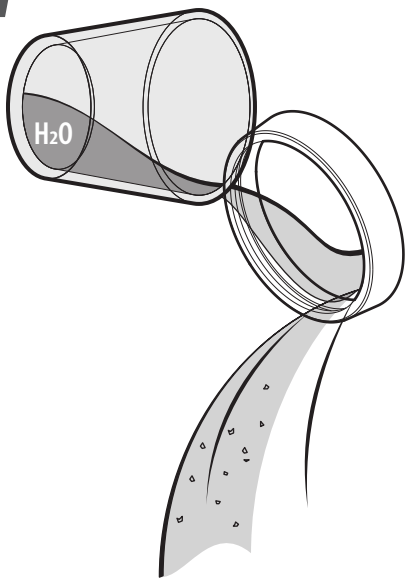

I

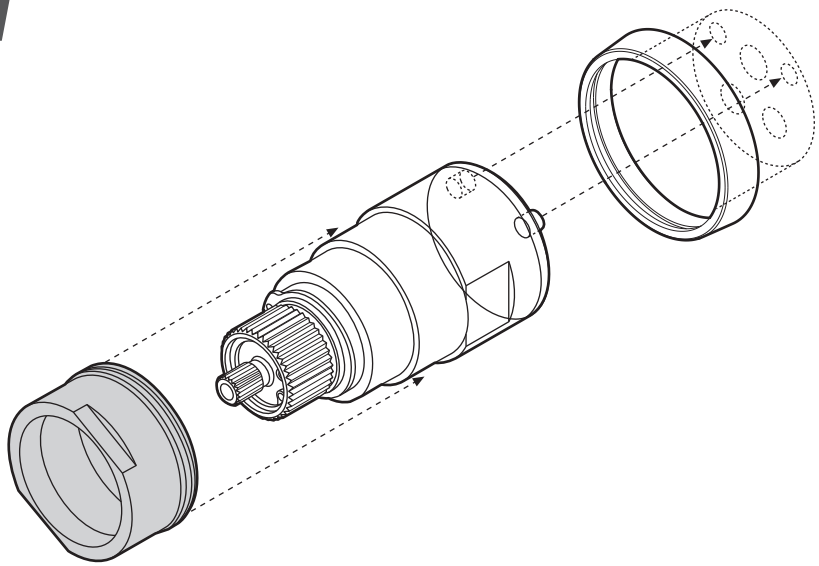

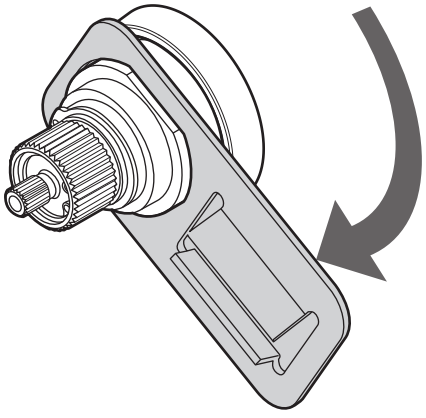

J

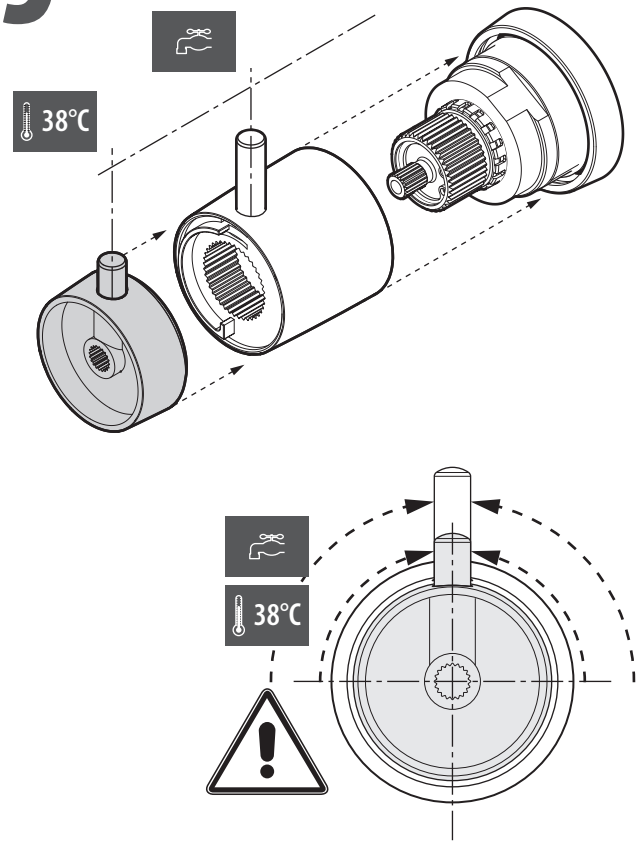

K1

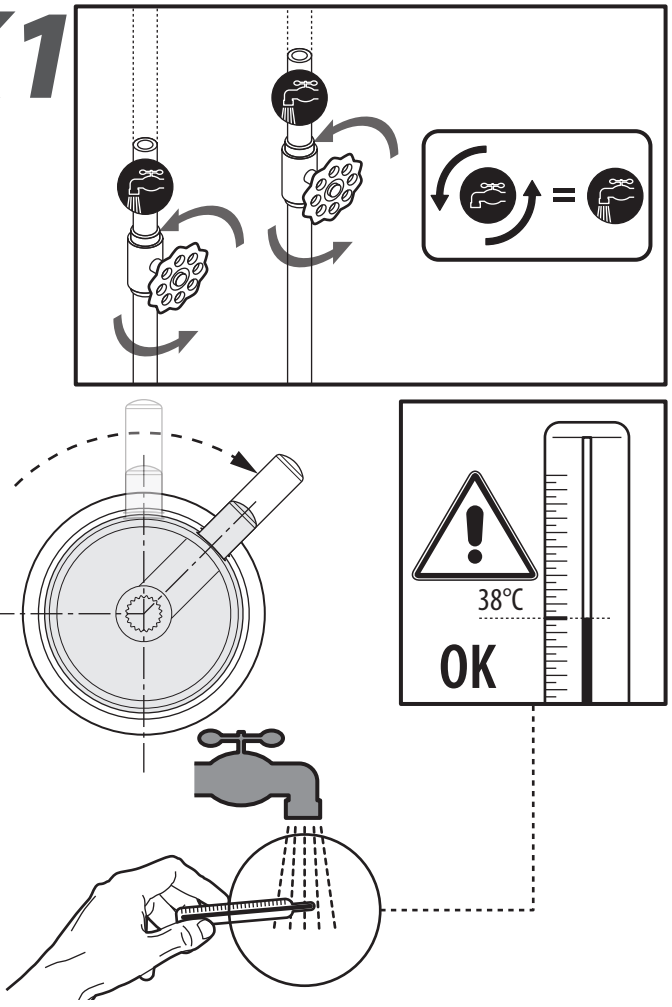

K2

1

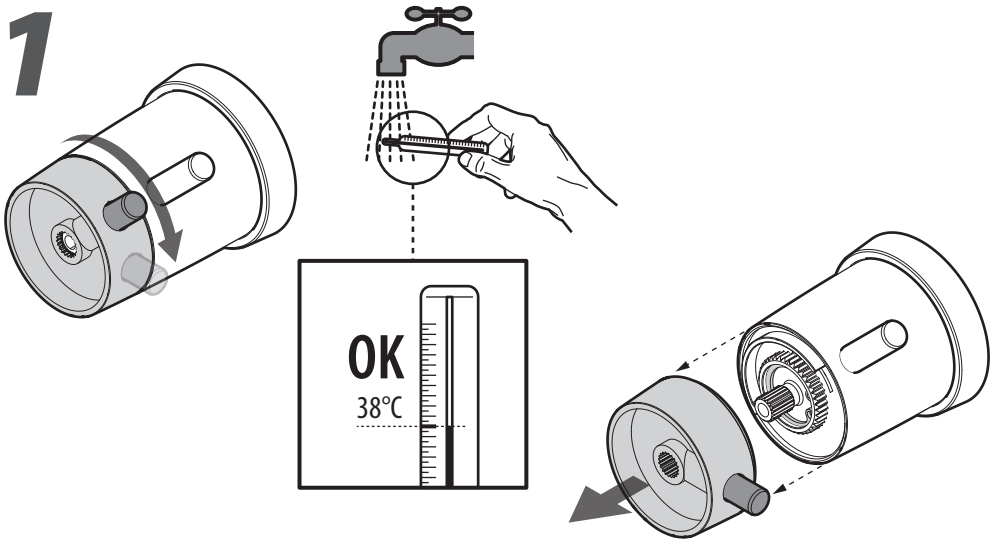

2

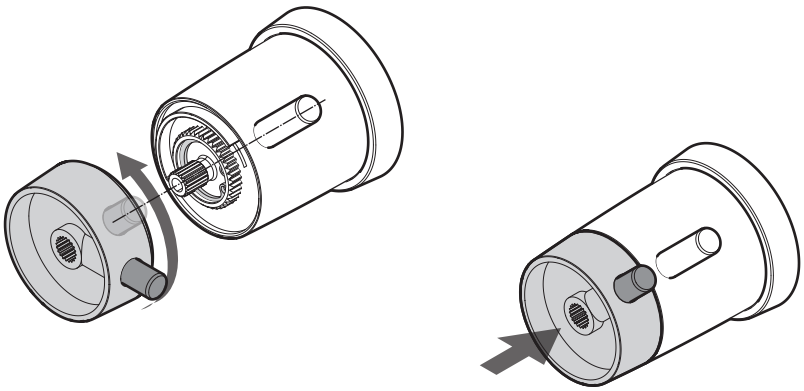

K3

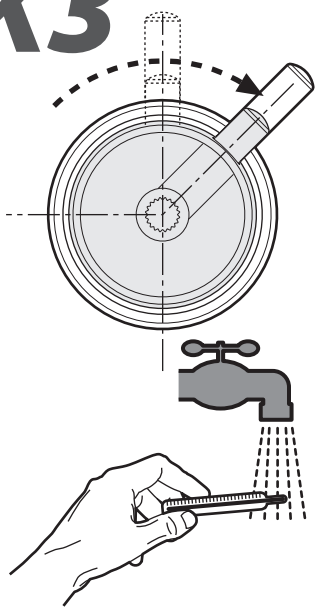

1

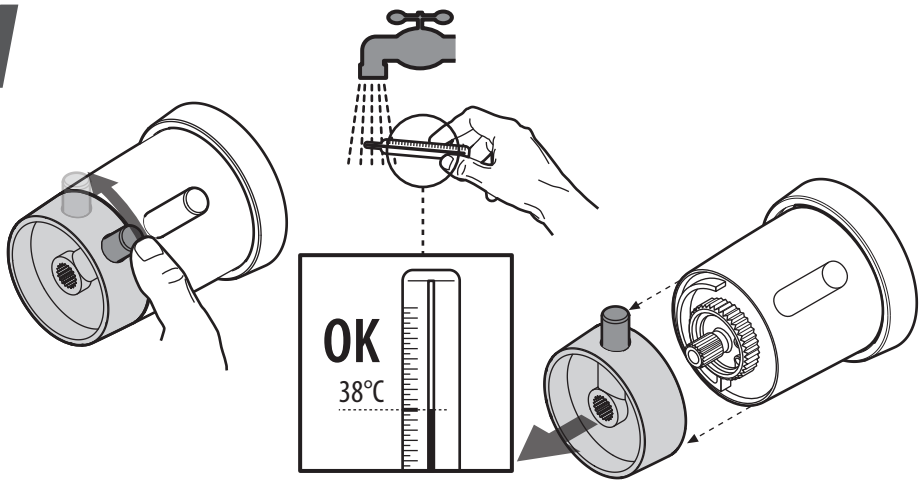

2

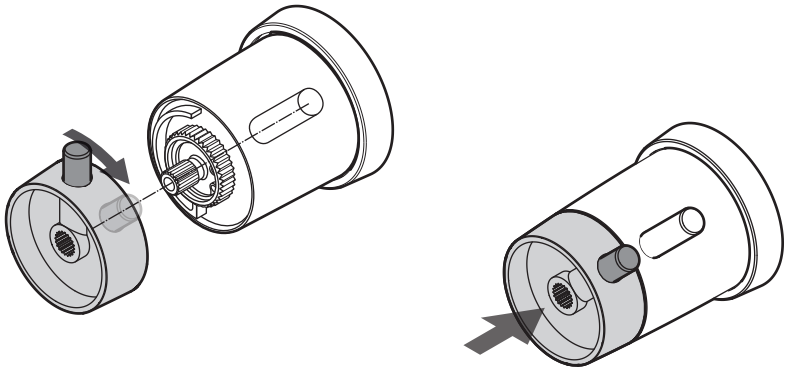

L

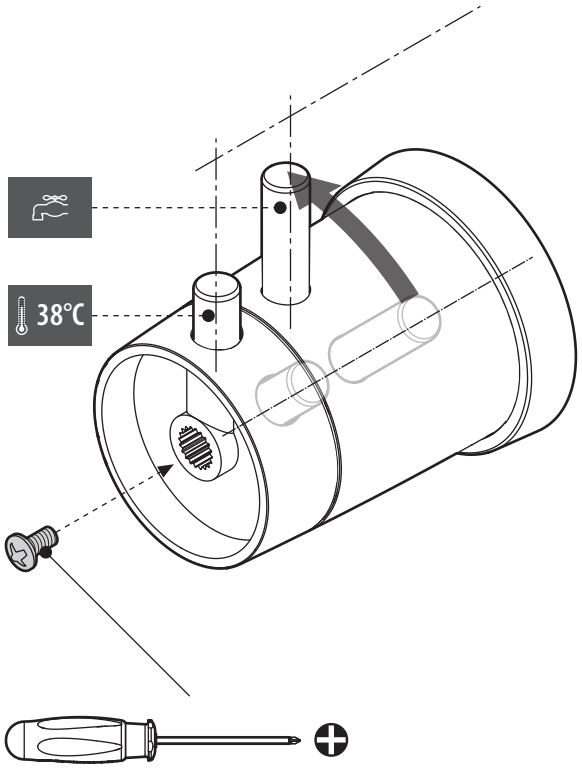

M

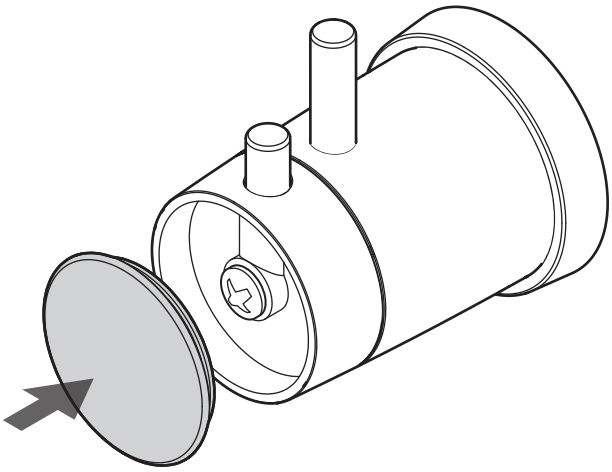

199448

NOVELLINI S.p.A.
Via Mantova, 1023 - 46034 Romanore di Borgo Virgilio (Mn)
Tel. +39 0376 6421
e-mail: info@novellini.com; safety@novellini.com
www.novellini.com

60708IST_03 (09 2019)